www.starlift.ru www.starlift.ru www.starlift.ru

底盘总成
CHASSIS ASSEMBLY

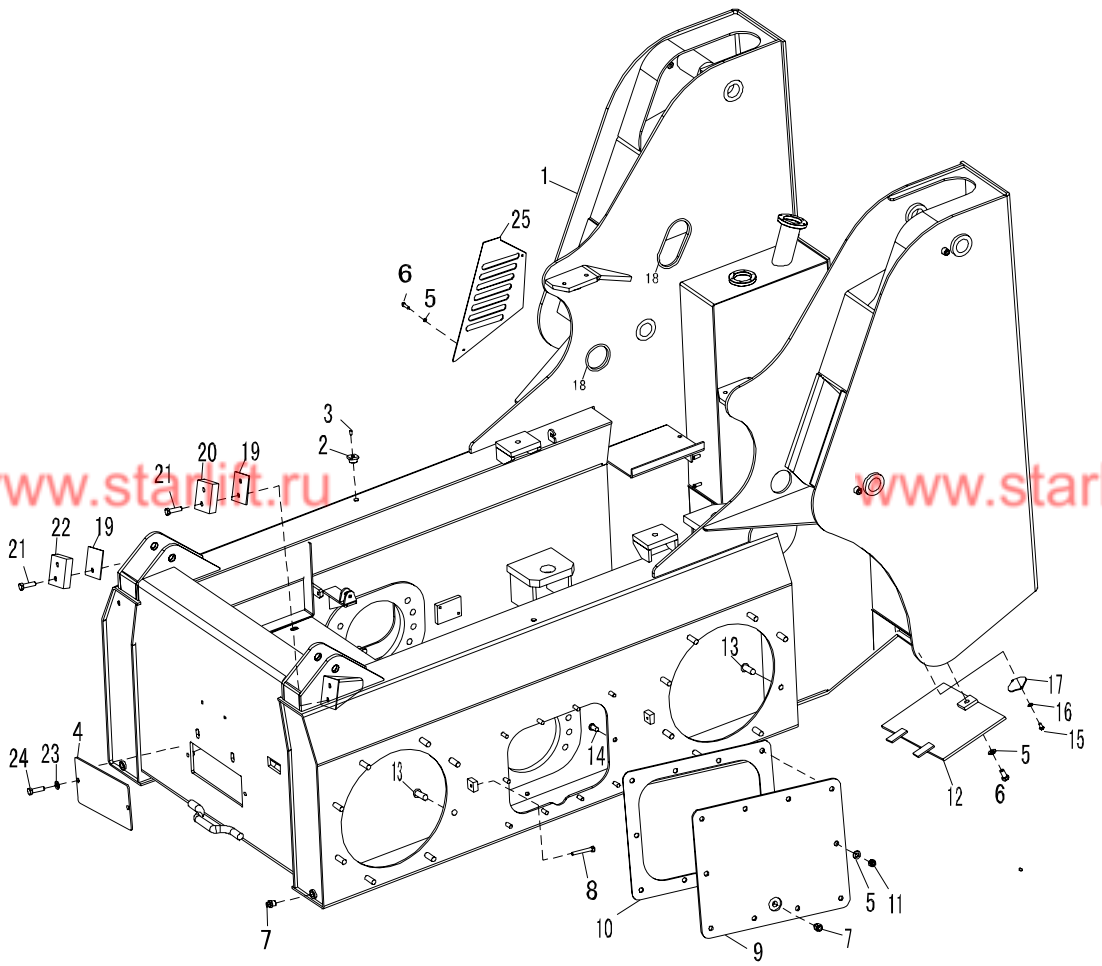

序号 POS.	编码 COD.	版本 VER.	DESCRIPTION	名　　称	数量 QTY	适用号机 SUIT NUM	互换 INT	选配 CHO
1	814311000000	9	CHASSIS	底盘焊接	1			
2	307070000004	2	EXHAUST STOPPER	排气塞	2			
3	712751990003	1	ADIABATIC SPONGE	隔热海绵	2			
4	302030000619	1	COVER PLATE	前盖板	1			
5	701504010001	1	WASHER	垫圈	2			
6	701104010005	1	BOLT	螺栓	3			
7	739806000009	1	CHOKE PLUG	堵头	4			
8	701104010012	1	BOLT	螺栓	2			
9	811610020000	1	FLANK COVER	侧盖	2			
10	302030000616	3	RUBBER CUSHION	橡胶垫	2			
11	701428010001	1	NUT	螺母	20			
12	811610030000	1	BACK COVER	底盘后盖	1			
13	304050000185	2	BOLT M10X26	滚花螺栓M10X26	20			
14	304050000187	2	BOLT M14X45	滚花螺栓M14X45	32			
15	701104006020	1	BOLT	螺栓	6			
16	701504006002	1	WASHER	垫圈	6			
17	302490001216	2	BACK PLATE	底部挡板	3			
18	301010301001	1	JACKET	护套	2			
19	302030002163	3	SHIM	垫片	2			
20	307990000276	1	UNDERLAY BLOCK L	垫块	1			
21	701302010029	1	SCREW	螺钉	2			
22	307990000277	1	UNDERLAY BLOCK R	右碰块	1			
23	701504008005	1	WASHER	垫圈8-DKL GB97.1	2			
24	701104008022	1	BOLT	螺栓	2			
25	302490000819	4	SIDE PLATE	侧板	2			

www.starlift.ru www.starlift.ru www.starlift.ru

www.starlift.ru www.starlift.ru www.starlift.ru

液压油箱
HYDRAULIC OIL TANK

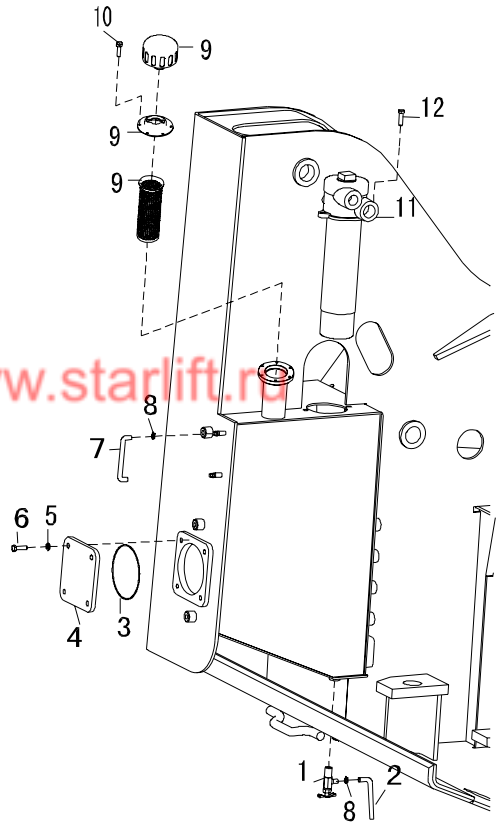

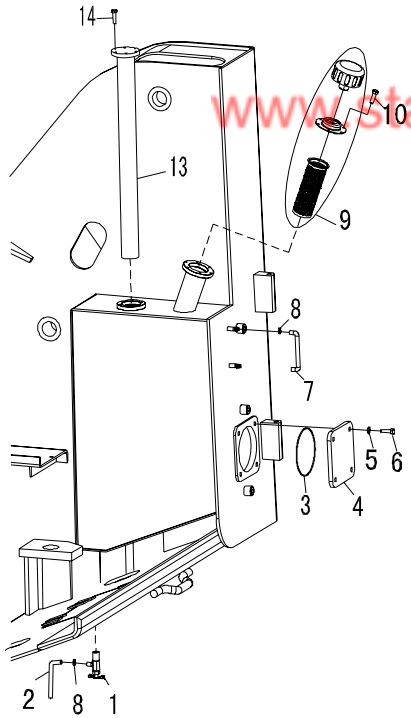

序号 POS.	编码 COD.	版本 VER.	DESCRIPTION	名　称	数量 QTY	适用号机 SUIT NUM	互换 INT	选配 CHO
1	730309000068	1	EXHAUST SWITCH	排水开关	1			
2	301020000024	1	TRANSPARENT TUBE	透明管	2			
3	703201128002	1	O-RING	0形密封圈	1			
4	302030000620	1	FLANGE COVER	清洗法兰盖	1			
5	701504008001	1	WASHER GB97.1	垫圈GB97.1	4			
6	701104010031	1	BOLT M10X20-8.8-DKL GB5783	螺栓M10X20-8.8-DKL GB5783	4			
7	301020000024	1	TRANSPARENT TUBE	透明管	2			
8	701901016001	1	HOSE-CLAMP	喉箍	3			
9	730402000038	1	AIR BREATHER	加油空气呼吸过滤器	1			
10	701314005004	1	SCREW M5×12-8.8 GB65	螺钉 M5×12-8.8 GB65	6			
11	730401000076	1	FILTER	回油过滤器	1			
12	701302010006	1	SCREW	螺钉	2			
13	720212000059	1	LIQUID LEVEL METER YS-51-580	液位传感器YS-51-580	1			
14	701103004001	1	BOLT	螺栓	6			

www.starlift.ru www.starlift.ru www.starlift.ru

www.starlift.ru www.starlift.ru www.starlift.ru

脚踏阀总成

PEDAL VALVE ASSEMBLY

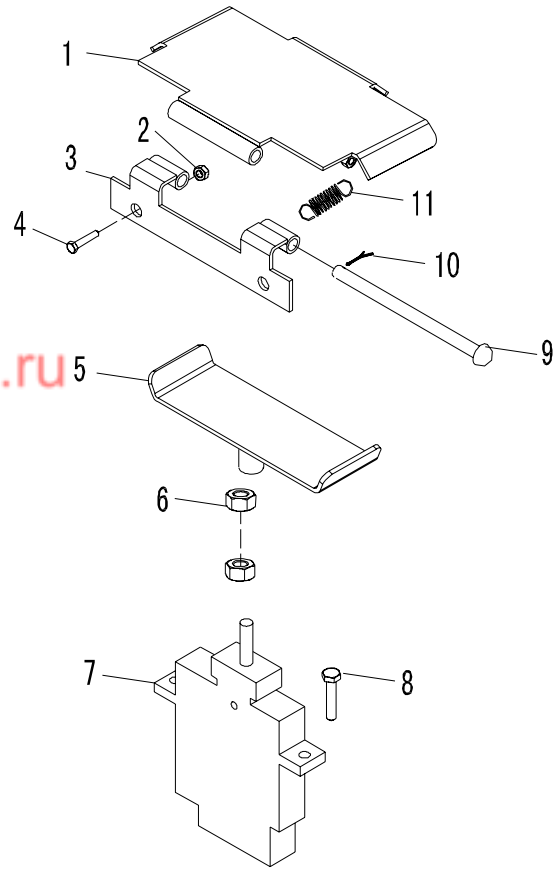

序号 POS.	编码 COD.	版本 VER.	DESCRIPTION	名　称	数量 QTY	适用号机 SUIT NUM	互换 INT	选配 CHO
1	811617020100	1	PADEL COVER BOARD ASSEMBLY	盖板焊接	1			
2	701406008004	1	NUT	螺母M8-DKL GB6170	2			
3	811614020200	1	PLATE	座	1			
4	701104008034	1	BOLT	螺栓M8X35-8.8-DKL GB5783	2			
5	811617010100	1	WELDS	脚踏板焊接	1			
6	701415010002	1	NUT	锁紧螺母M10-DKL GB6184	2			
7	730306000008	1	VALVE	推土阀JRCVD-02（SWL）	1			
8	701104006020	1	BOLT	螺栓M6X20-8.8-DKL	2			
9	304020000006	1	PIN	脚踏阀铰链销	1			
10	701703002502	1	PIN	销2.5X16 GB91	1			
11	301030000026	1	SPRING	弹簧D=9 d=1.2	1			

www.starlift.ru www.starlift.ru www.starlift.ru